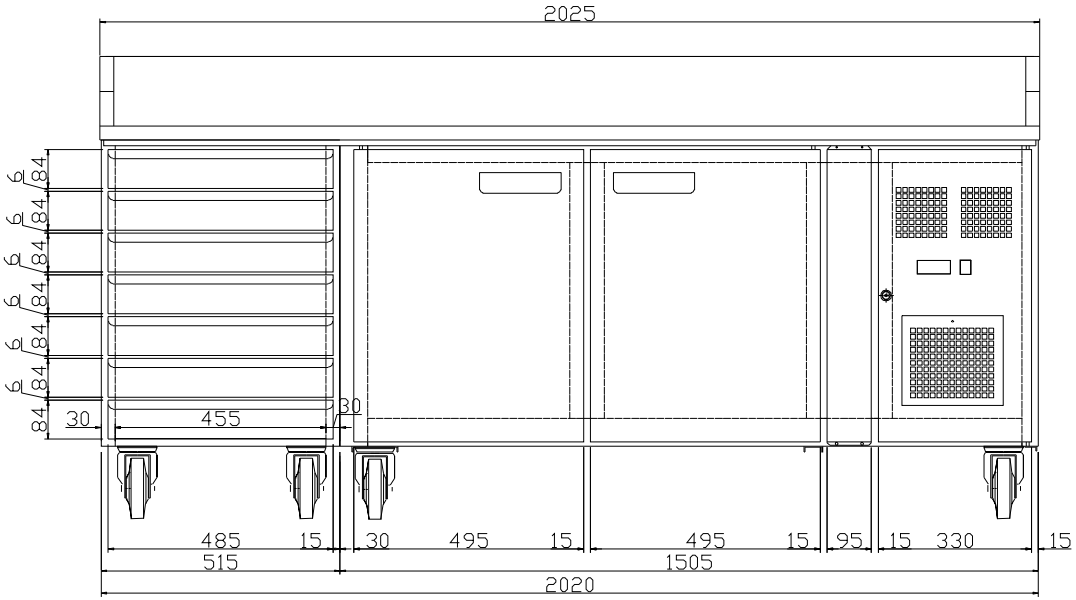

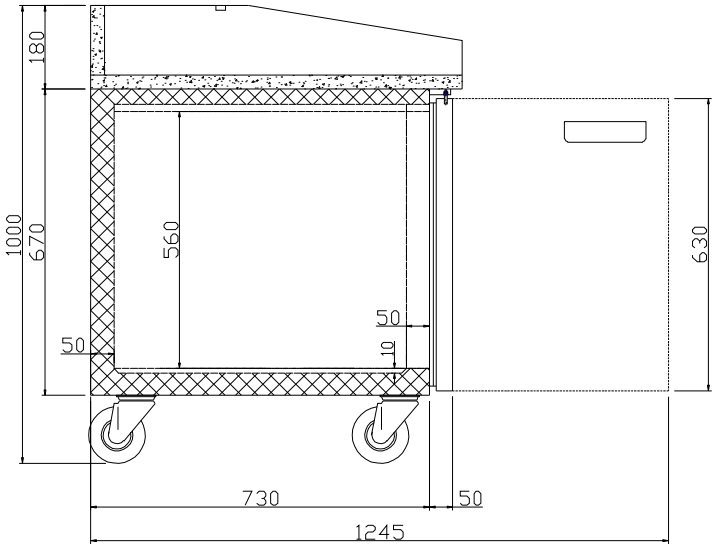

OUTSIDE SIZE OF G-PZ2610TN